AIR CONDITIONING: AUTOMATIC

Component Index

A/C Compressor Clutch Assemby (4.2L)
A/C Compressor Clutch Assemby (5.3L)
A/C Low Pressure Switch
A/C Refrigerant Pressure Sensor (4.2L)
A/C Refrigerant Pressure Sensor (5.3L)
A/C Relay 44
Air Temperature Actuator-Auxiliary
Air Temperature Actuator-Left
Air Temperature Actuator-Right
Air Temperature Sensor Assembly-Inside
Air Temperature Sensor-Lower Left
Air Temperature Sensor-Lower Right
Air Temperature Sensor-Upper Left
Air Temperature Sensor-Upper Right
Ambient Air Temperature Sensor
Ambient Light/Sunload Sensor Assembly
Blower Motor Control Module
Blower Motor Control Processor-Auxiliary
Blower Motor Switch-Front Auxiliary
Blower Motor-Auxiliary
Body Control Module (BCM)
Console Mode Actuator
Coolant Bypass Valve
Defrost Actuator
Fuse Block-Rear
Fuse Block-Underhood
HVAC Control Module
HVAC Control Module-Auxiliary
Inflatable Restraint Steering Wheel Module Coil
Mode Actuator
Powertrain Control Module (PCM) (4.2L)
Powertrain Control Module (PCM) (5.3L)
Recirculation Actuator
SP201
Steering Wheel Control Assembly

Preliminary

AIR CONDITIONING: AUTOMATIC (Blower Controls)

Circuit Schematic

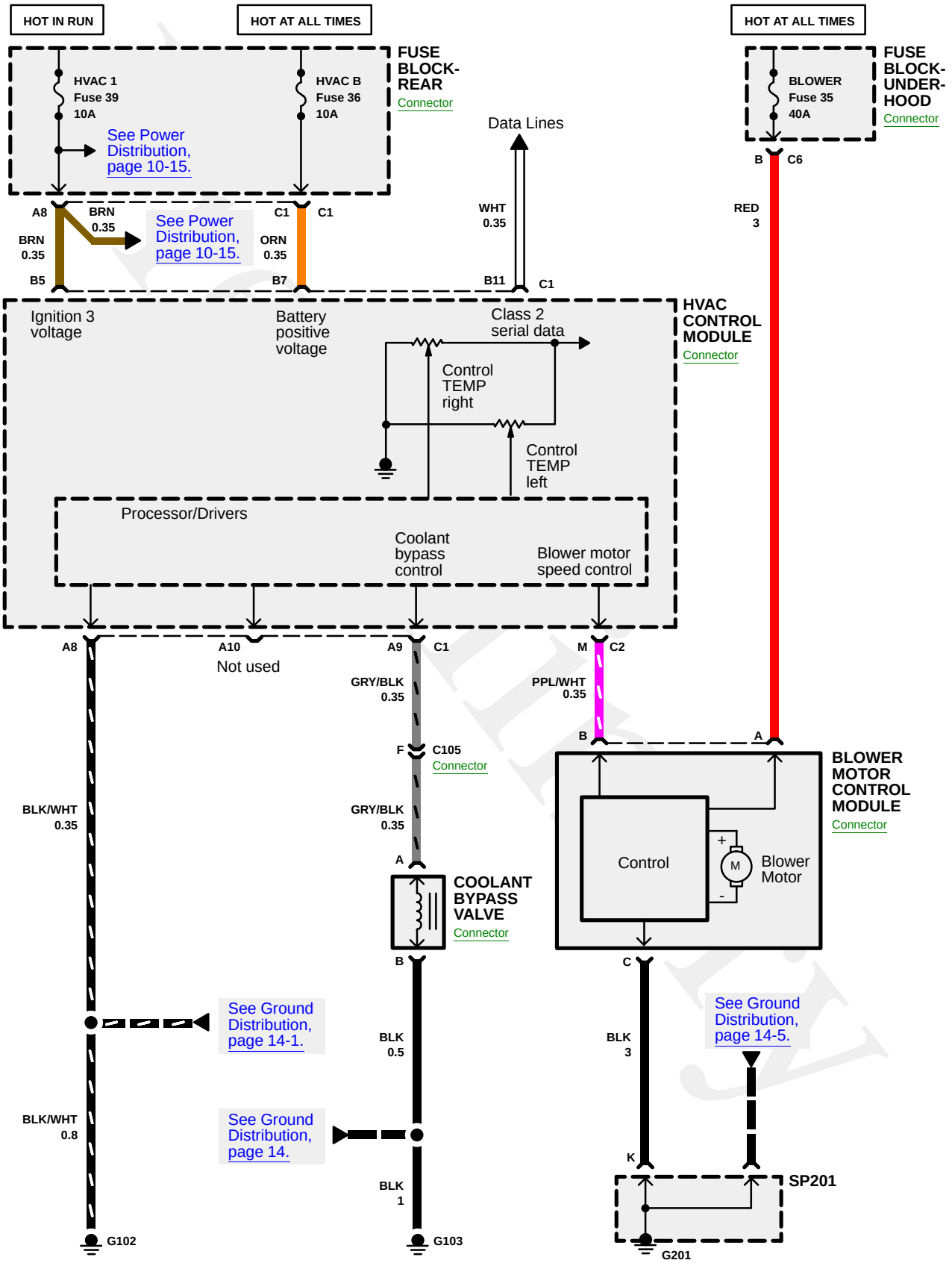

AIR CONDITIONING: AUTOMATIC (Compressor Controls)

Circuit Schematic

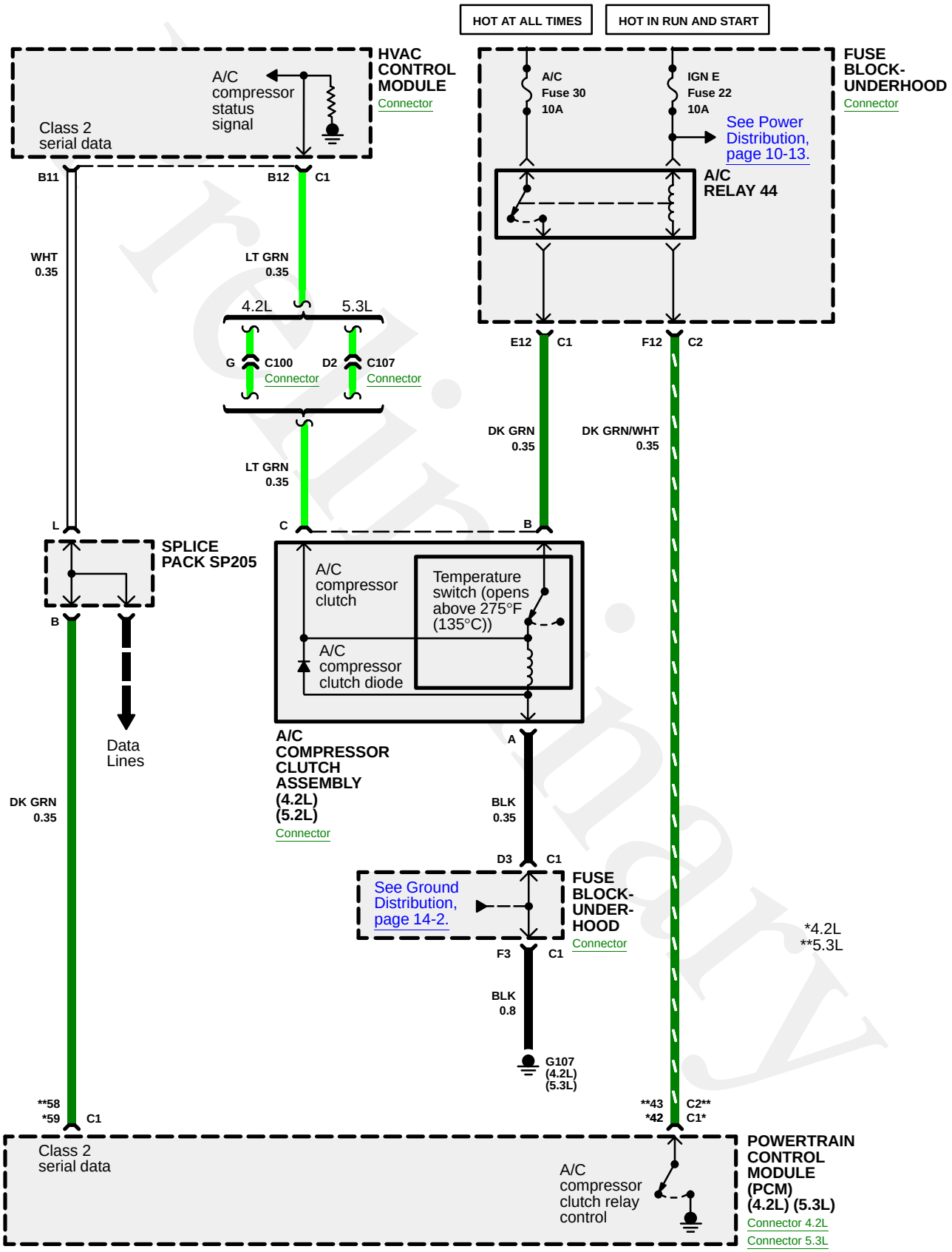

AIR CONDITIONING: AUTOMATIC (Steering Wheel Controls)

Circuit Schematic

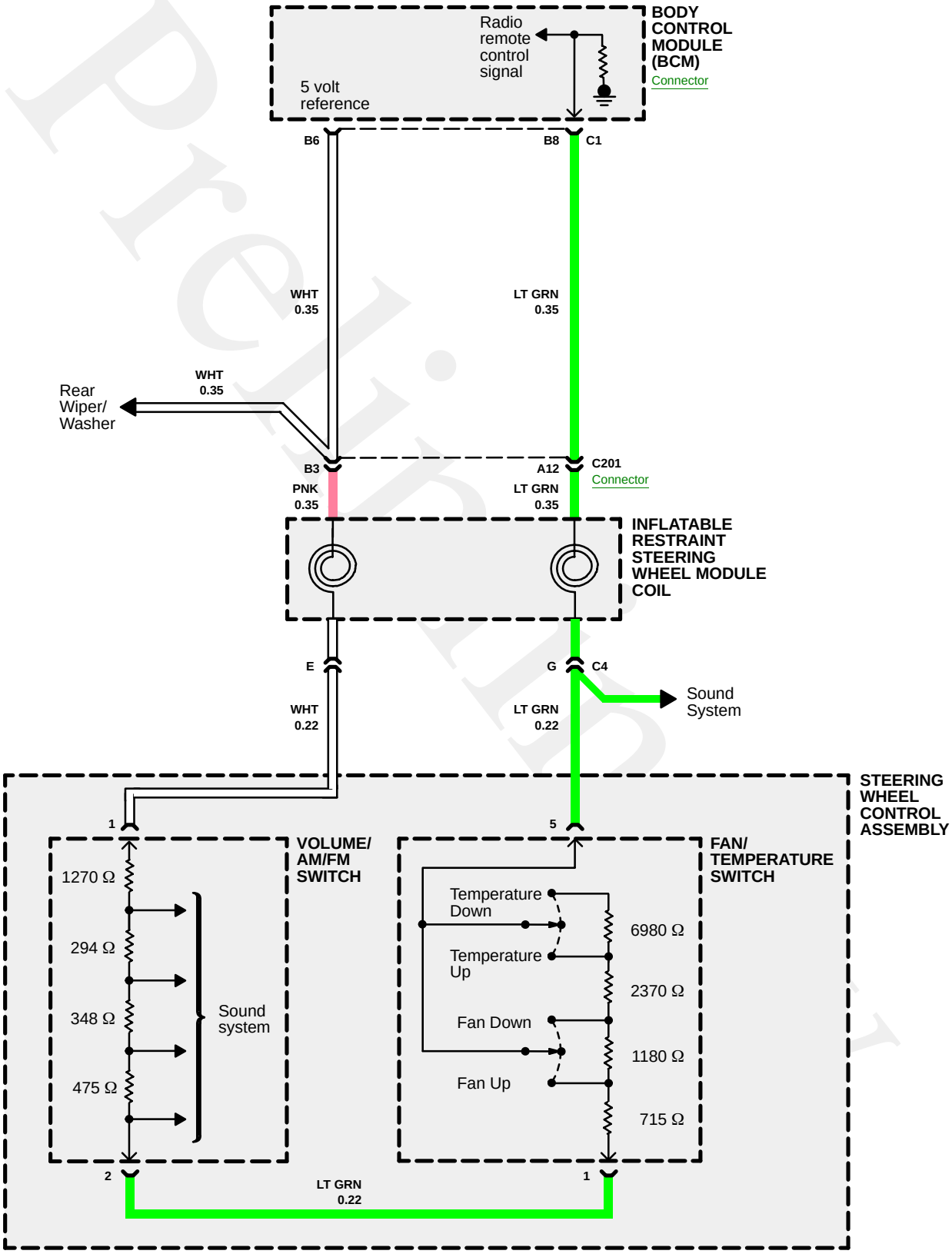

AIR CONDITIONING: AUTOMATIC (Sensors)

Circuit Schematic

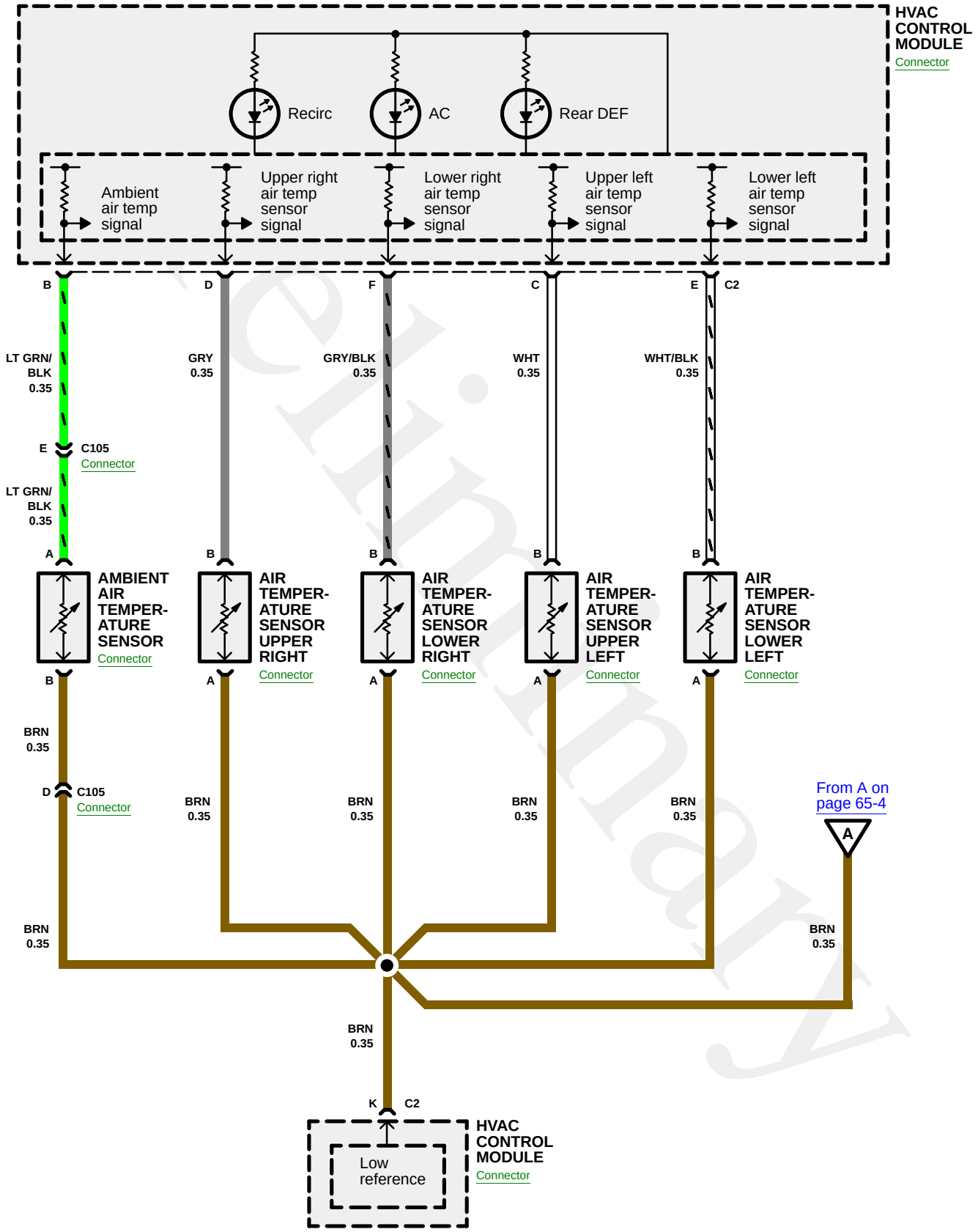

Preliminary

AIR CONDITIONING: AUTOMATIC (Sensors)

Circuit Schematic

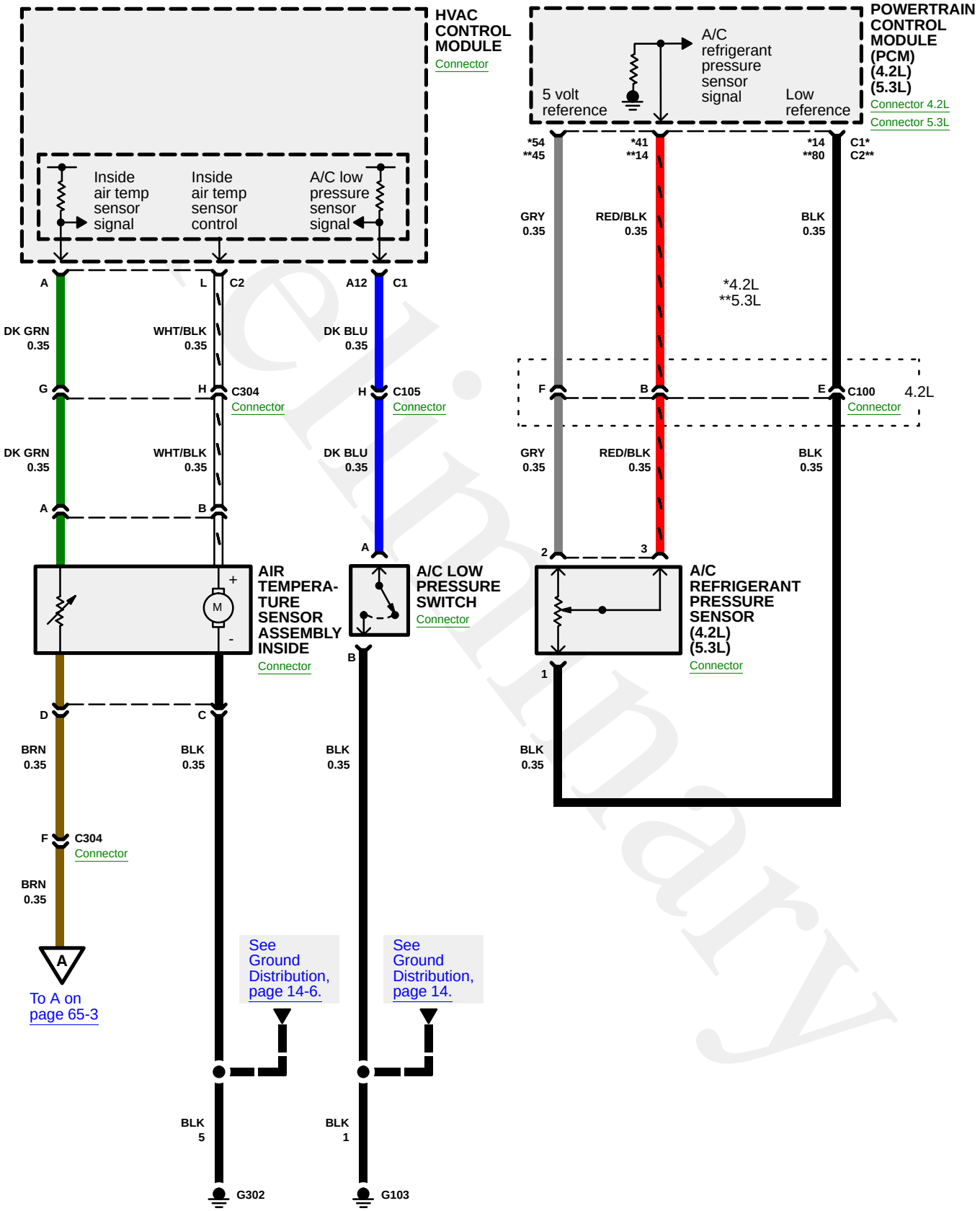

Preliminary

AIR CONDITIONING: AUTOMATIC (Sensors)

Circuit Schematic

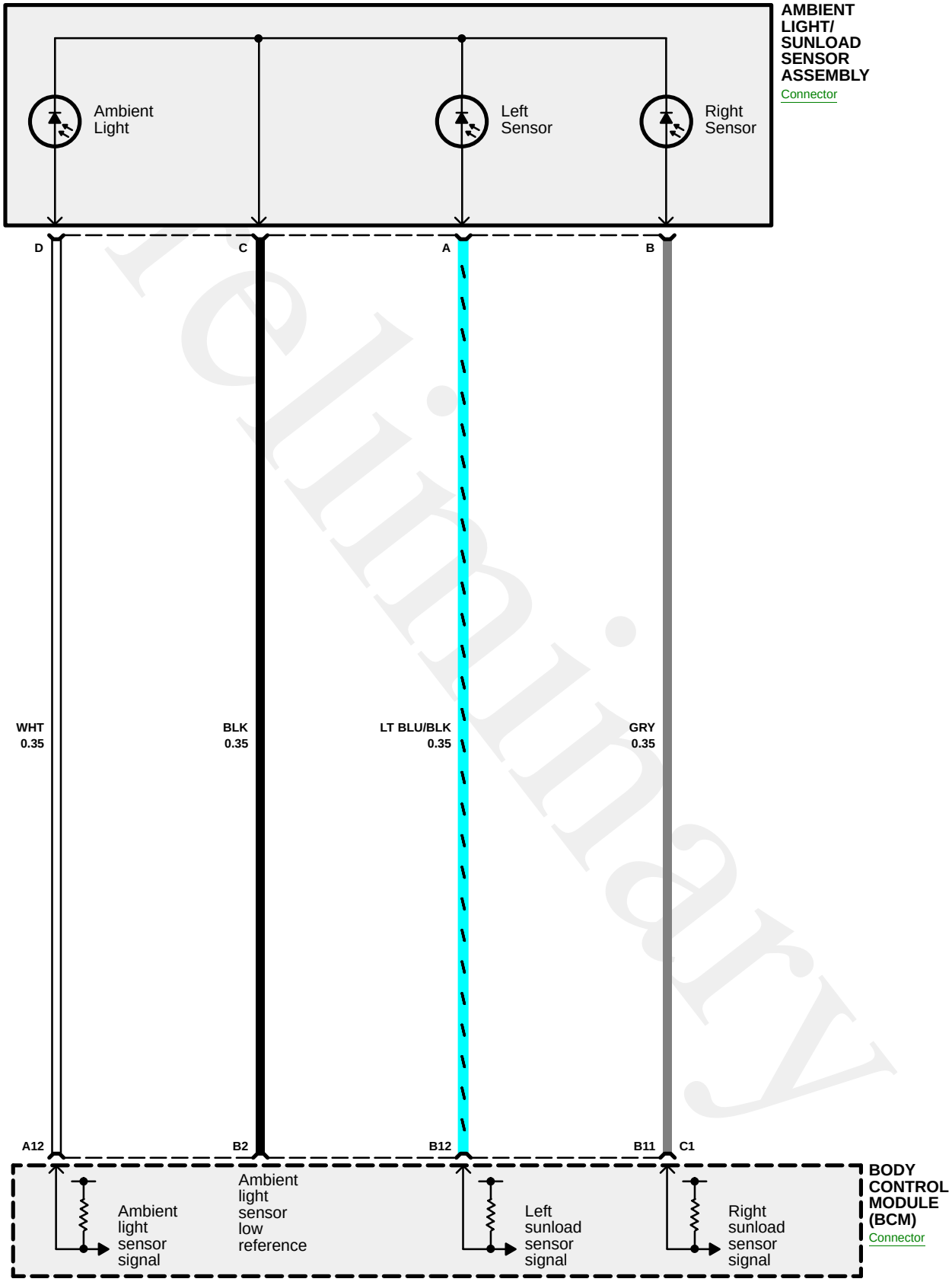

Preliminary

AIR CONDITIONING: AUTOMATIC (Air Delivery Controls)

Circuit Schematic

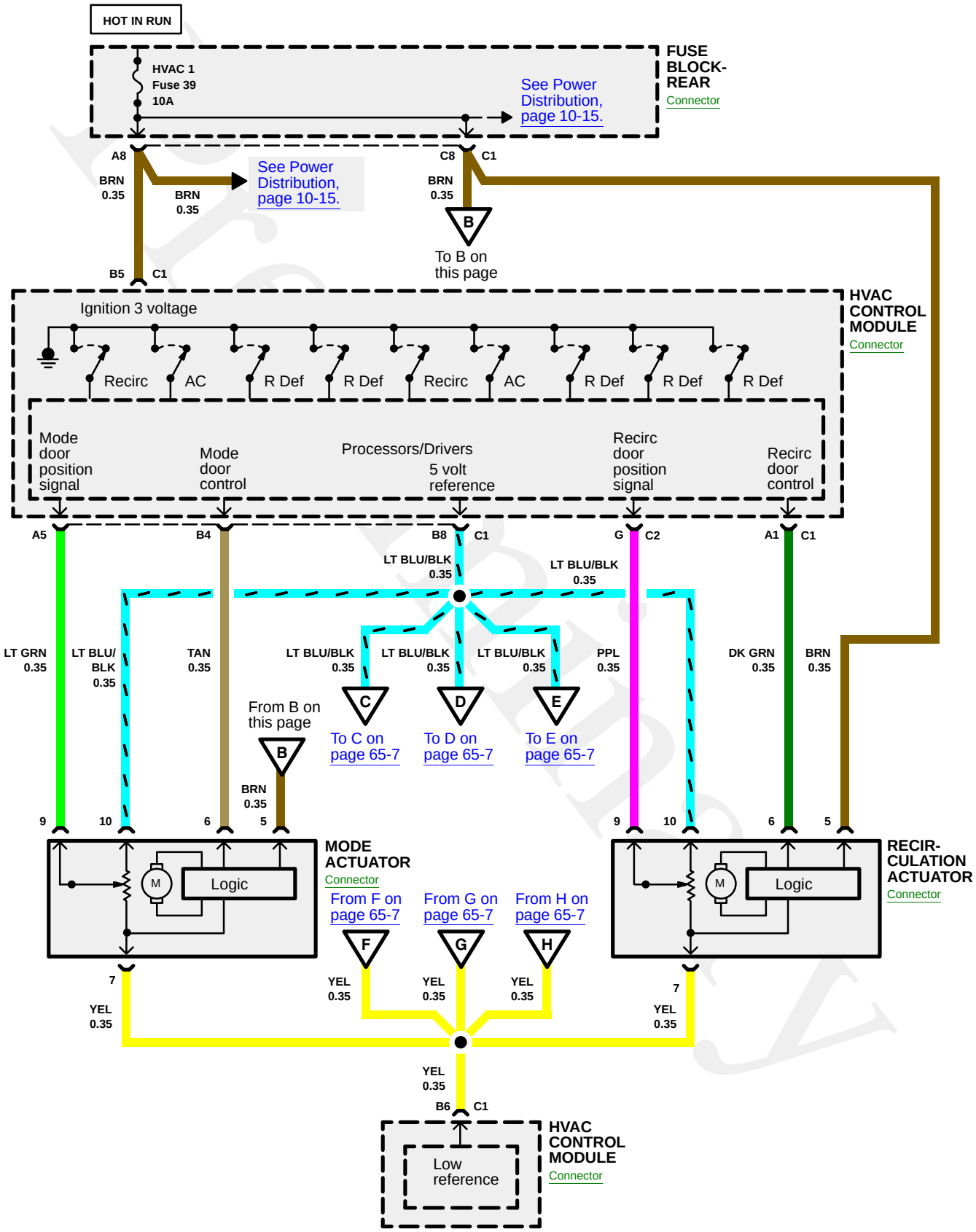

AIR CONDITIONING: AUTOMATIC (Air Delivery Controls)

Circuit Schematic

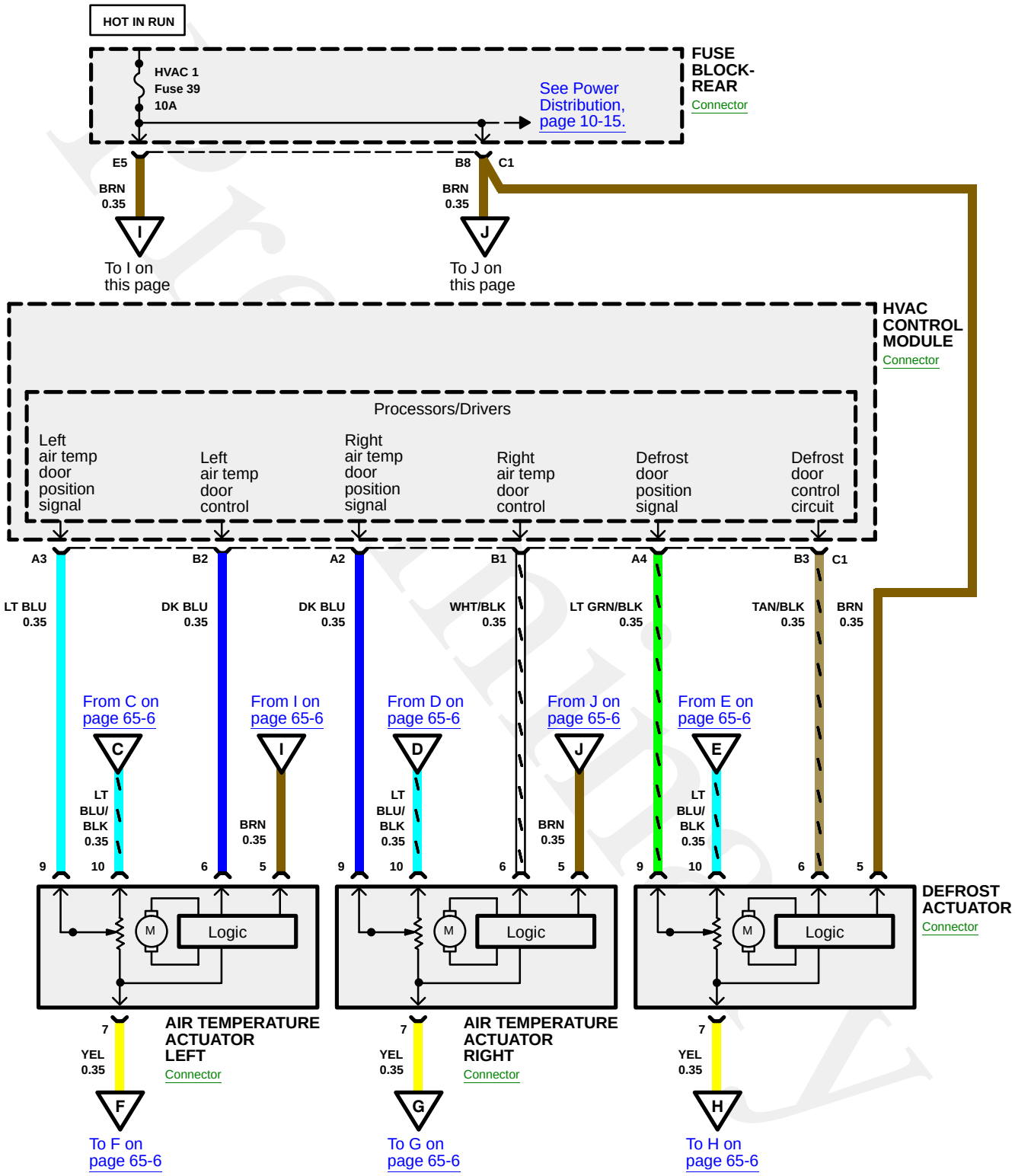

AIR CONDITIONING: AUTOMATIC (Auxiliary Controls)

Circuit Schematic

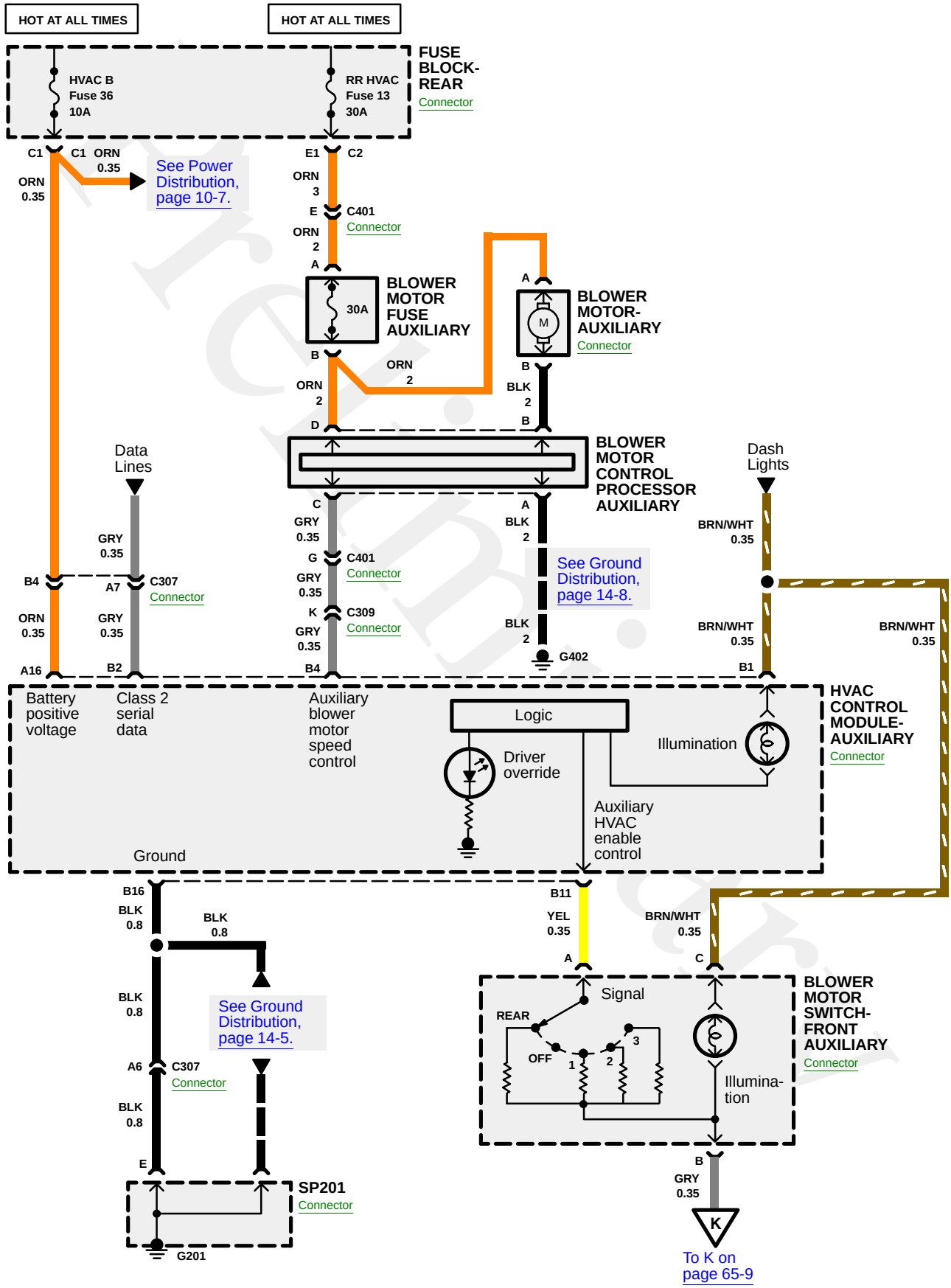

AIR CONDITIONING: AUTOMATIC (Auxiliary Controls)

Circuit Schematic

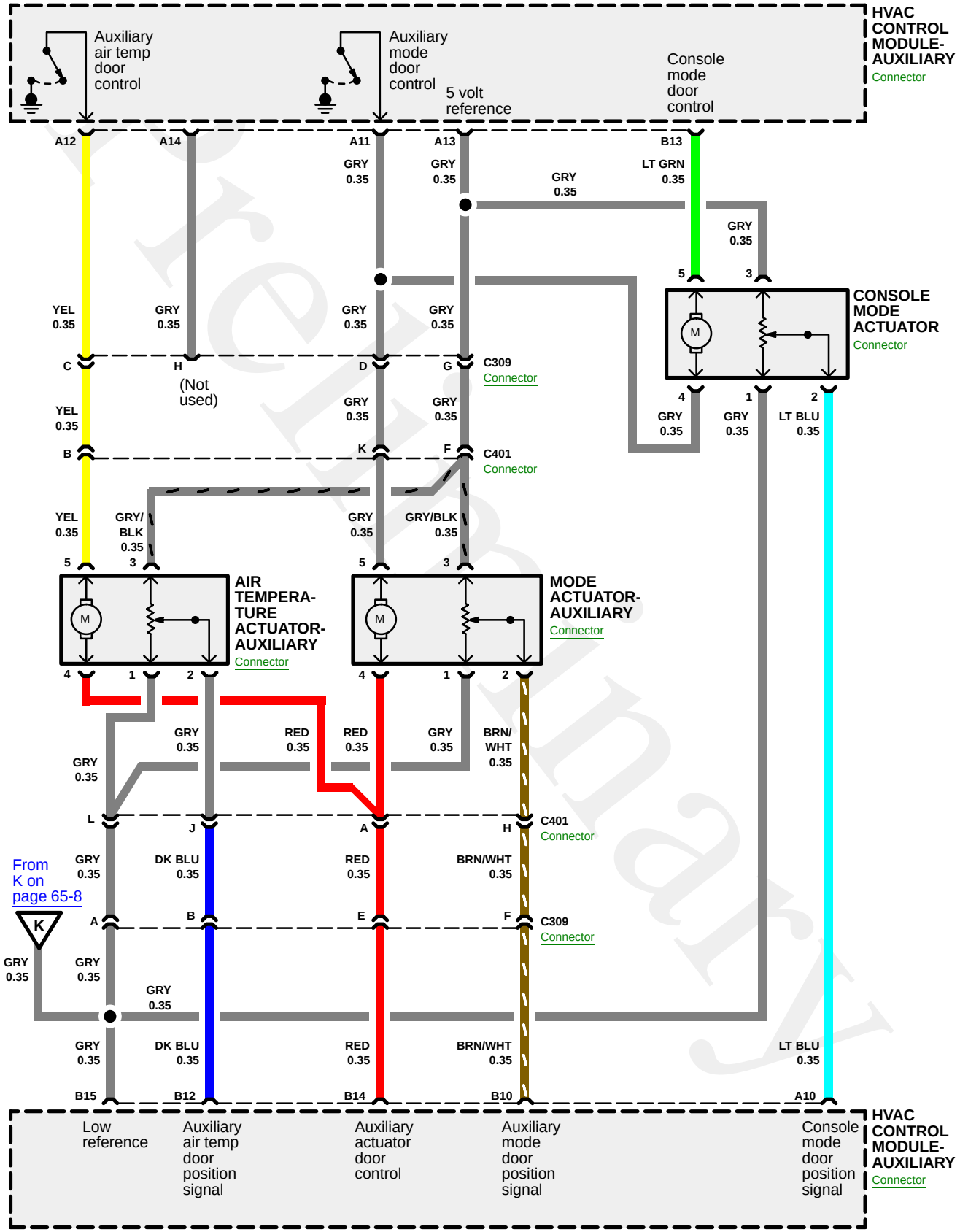

Preliminary

AIR CONDITIONING: AUTOMATIC

Circuit Operation

The Automatic Heater-A/C Control Unit is powered at all times through fuse 36 HVAC-B and with the engine running through fuse 39 HVAC 1 and is grounded at G102.

Refer to Section 1 of the Workshop Manual for further diagnosis.

Preliminary

AIR CONDITIONING: AUTOMATIC

Component Location Index

(Refer to Section 201 for photographs.)

Component		Photo No.
A/C Compressor Clutch Assemby (4.2L)	Bottom left side of engine	32
A/C Compressor Clutch Assemby (5.3L)	Bottom right side of engine	31
A/C Low Pressure Switch	Right rear of engine compartment	15
A/C Refrigerant Pressure Sensor (4.2L)	Bottom right side of engine	32
A/C Refrigerant Pressure Sensor (5.3L)	Lower right front of engine	29
A/C Relay 44	In the Underhood Fuse Block	49
Air Temperature Actuator-Auxiliary	In the rear of HVAC module, behind right rear interior body panel	111
Air Temperature Actuator-Left	Below the I/P, above the accelerator	78
Air Temperature Actuator-Right	Behind right of the I/P center support	78
Air Temperature Sensor Assembly-Inside	In the left B-pillar	82
Air Temperature Sensor-Lower Left	In the lower left air duct assembly	81
Air Temperature Sensor-Lower Right	In the lower right air duct assembly	80
Air Temperature Sensor-Upper Left	In the upper air duct	76
Air Temperature Sensor-Upper Right	In the upper air duct	76
Ambient Air Temperature Sensor	Above the left side of the grille	1
Ambient Light/Sunload Sensor Assembly	In the center of the I/P upper trim panel	89
Blower Motor Control Module	Below right side of the I/P	79
Blower Motor Control Processor-Auxiliary	In the Rear HVAC Module, behind the right rear interior panel	
Blower Motor Switch-Front Auxiliary	In center console	72
Blower Motor-Auxiliary	Behind the interior right rear trim panel	111
Body Control Module (BCM)	On Rear Fuse Block, under left rear seat	53
Console Mode Actuator	In the lower bottom of the lower console	84
Coolant Bypass Valve	Right rear of engine compartment	10
Defrost Actuator	On the cowl side of the upper I/P carrier	83
Fuse Block-Rear	Under the left rear seat	52
Fuse Block-Underhood	Left side of engine compartment	3
HVAC Control Module	In the IP center trim panel, beneath the radio	75
HVAC Control Module-Auxiliary	At rear of lower console	85
Inflatable Restraint Steering Wheel Module Coil	In center hub of steering wheel	

Preliminary

AIR CONDITIONING: AUTOMATIC

Component Location Index

(Refer to Section 201 for photographs.)

Component		Photo No.
Mode Actuator	Behind I/P, left of the I/P center support	83
Powertrain Control Module (PCM) (4.2L)	Left front of engine	5
Powertrain Control Module (PCM) (5.3L)	Left front of engine compartment	25
Recirculation Actuator	Above the blower motor, on the right side of the I/P carrier	
SP201	Near right front of lower console	80
Steering Wheel Control Assembly	In the steering wheel hub	66
Connector		
C100 (4.2L) (10-BLK)	Left front of engine	5
C105 (10-BLK)	Left side of engine compartment	4
C107 (5.3L) (38-BLK)	Left rear of engine compartment	18
C201 (17-BLK), (18-BLK), and (13-GRY)	At base of steering column	120
C304 (16-BLK)	Under carpet, rear floor area	103
C307 (18-MD GRY)	Beneath rear of lower console	86
C309 (10-BLK)	Under rear of lower console	86
C401 (12-BLK)	Behind right rear body side panel	111
Ground		
G102	Left side of engine compartment	4
G103	Right rear of engine compartment	15
G107 (4.2L)	Lower left side of engine	37
G107 (5.3L)	Lower left side of engine	38
G201	Near right front of lower console	80
G302	On the lower left B-pillar	105

Preliminary